ROTOBALE
COMPACTION SOLUTIONS
PACK MORE, SPEND LESS
RCS

SAFETY FIRST!

Operation & Maintenance Manual
RC Series Compactor

Standard Model ☐ **PSR Model** ☑

Rotobale Compaction Solutions Inc.
7232 Arthur Road #5 West, Kenilworth Ontario, N0G 2E0
Ph: 800-565-8027/ Fax: 519-323-3816
www.rotobalecompaction.ca

Rotobale Compaction Solutions Inc.
Kenilworth, Ontario, N0G 2E0
Tele (519) 323-3673 Fax: (519) 323-3816

Models RC (Wet) and 4260 (Dry) Compactors

Operation Manual

TO TURN ON COMPACTOR: Insert key in the key start switch and turn it right to the "start" position. If the **compactor** does not start. Disengage the emergency stop button (see below) if the "full" light is on; (see below) FULL LIGHT Remove key when the compactor is not in use. (standard)

EMERGENCY STOP BUTTON: Press to stop the compactor. The compactor will remain in the 'off' mode until the emergency stop button is disengaged. To accomplish this; rotate the knurled outer edge of the button in direction of arrow. The emergency stop button plunger will pop out and the **"**power on**"** light will illuminate, allowing the compactor to be started.

75% FULL LIGHT: This light will turn on when the ram is traveling forward and pressure inside the charging chamber reaches a preset limit (around 1,000 psi).

FULL LIGHT: When pressure inside the charging chamber reaches a preset limit, (around 1,500 psi), the "full light" will illuminate and the compactor will shut off. The container needs to be emptied.

RESET: Turns off the "full and 75% light" and resets the system to enable start.

REVERSE BUTTON: Used to put ram in reverse.

PRESSURE GAUGE: (Optional) Indicates compaction pressure.

TIMER: (Optional) Will allow the ram to continuously run through a preset number of complete cycles before the machine shuts off.

Dumper: dumps automatically when compactor is started

Winch Handle: (Optional) Used to pull container into place.

Rotobale Compaction Solutions Inc.
Kenilworth, Ontario, N0G 2E0
Tele (519) 323-3673 Fax: (519) 323-3816

Models RC (Wet) and 4260 (Dry) Compactors

Maintenance Manual

Hydraulic System:

The manufacturer recommends regular inspection of all hoses and visual inspection of hydraulic components. All inspections must be done with compactor disabled. By doing so the user becomes more familiar with the compactor, which in turn guarantees early detection of possible problems (E.g.: leaks). When inspecting hoses look for cuts, abrasions and fluid. Look for leaks at and around the 'power pack', at all hose connections and inside the rear of the compaction chamber. If any hydraulic fluid is visible, the user should contact the manufacturer. The hydraulic fluid level in the power pack reservoir should be maintained at 2" from the top of the tank, with the ram in the rear position. Only a qualified technician should service any components in the hydraulic system.

Lockout Procedure:

NOTE: Only a qualified technician. Should perform work on electrical system
The person working on these machines should turn the machine off with the stop button. To turn off and lockout the power supply, follow the electrical supply cord from the machine to the disconnect box on the wall. This box should be located within 30 feet of the machine. Pull the handle down or turn the switch to the "off" position to shut off the electricity. Put a padlock through the holes of the handle or switch and lock it so that it cannot be turned on without removing the lock. Only the person locking out the machine should have a key for the padlock. If more than one person is involved, the person who disconnected and locked out the power supply should communicate the purpose and status of the disconnecting and locking out. A non-conducting tag secured in a conspicuous location may serve this purpose. For more guidelines concerning this procedure, refer to the "Occupational Health and Safety Act and Regulations for Industrial Establishments" section

Warranty:

All equipment designed and manufactured by Rotobale Compaction Solutions Inc. (RCS) carries a (1) year parts and labour guarantee. A Rotobale waste system is constructed of high-grade materials and is guaranteed to perform on a continued basis at its rated capacity. Any parts that prove defective within (1) year from the date of installation will be replaced without charge, provided the purchaser notifies any such defects to RCS.
Some units may be purchased with extended warranties.

Voiding of Warranty:

If the contents of this manual are explicitly followed, the operation of the Rotobale waste system is guaranteed. If however operations are performed in a matter not in accordance with these instructions and a defect appears in the waste system, the owner shall make void the warranty that accompanies their Rotobale machine. In addition, defects resulting from service work not authorized by R.C.S. shall render the warranty void.

Rotobale Compaction Solutions Inc.
Kenilworth (Ontario) N0G 2E0
Tél. 519-323-3673 Fax: 519-323-3816

Compacteur – modèles RC (humide) et 4260 (sec)

Manuel d'opération

POUR METTRE LE COMPACTEUR SOUS TENSION: insérez la clé dans l'interrupteur de démarrage puis tournez la clé vers la droite jusqu'à la position «DÉMARRER». Si le **compacteur** ne démarre pas, désactivez le bouton d'arrêt d'urgence (voir ci-dessous). Si la lumière qui indique «PLEIN» est allumée (voir PLEIN ci-dessous), retirez la clé lorsque le compacteur n'est pas en service (standard).

ARRÊT D'URGENCE: appuyez sur ce bouton pour arrêter le compacteur. Le compacteur restera en mode «ARRÊT» jusqu'à ce que le bouton d'arrêt d'urgence soit désactivé. Pour ce faire: tournez le rebord extérieur crénelé dans la direction de la flèche. Le poussoir du bouton d'arrêt d'urgence se relèvera et le bouton lumineux «SOUS TENSION» s'allumera, ce qui permettra au compacteur de démarrer.

PLEIN À 75%: cette lumière s'allume lorsque le bélier se déplace vers l'avant et que la pression dans la cellule de chargement atteint une limite prédéterminée (environ 1000 psi).

PLEIN: lorsque la pression dans la cellule de chargement atteint une limite prédéterminée (environ 1500 psi), la lumière qui indique «PLEIN» s'allumera et le compacteur s'arrêtera. Le conteneur doit être vidé.
RESET (réinitialiser): sert à éteindre la lumière qui indique «PLEIN» et «PLEIN À 75%» et à réinitialiser le système pour permettre le redémarrage.

MARCHE ARRIÈRE: ce bouton sert à mettre le bélier en marche arrière.

INDICATEUR DE PRESSION: (facultatif) indique la pression de compactage.

MINUTERIE: (facultative) permet de faire fonctionner le bélier sans arrêt pendant un nombre prédéterminé de cycles complets avant que la machine s'arrête.

Poignée de basculeur: (facultatif) sert à renverser et à verser les conteneurs dans la trémie.

Poignée de treuil: (facultatif) sert à ramener le conteneur en place.

Compacteur – modèles RC (humide) et 4260 (sec)

Manuel d'entretien

Système hydraulique:
Le fabricant recommande des inspections régulières de tous les tuyaux et une inspection visuelle des composants hydrauliques. Toutes les inspections doivent être faites pendant que le compacteur est désactivé. En faisant ces inspections, l'utilisateur se familiarise avec le compacteur, ce qui par ailleurs garantit une rapide détection des problèmes potentiels (p. ex., les fuites). En inspectant les tuyaux, vérifiez s'il y a des coupures, des écorchures, du liquide. Vérifiez s'il y a des fuites sur le «bloc d'alimentation» et autour, à tous les joints de tuyaux et à l'intérieur de la partie arrière du compartiment de compactage. S'il remarque du fluide hydraulique, l'utilisateur doit contacter le fabricant. Le niveau de fluide hydraulique dans le réservoir du «bloc d'alimentation» doit être maintenu à deux (2) pouces du haut du réservoir, le piston étant en position arrière. Seul un technicien qualifié doit faire l'entretien des composants du système hydraulique.

Procédures de verrouillage:
REMARQUE: seul un technicien qualifié doit travailler sur le système électrique
La personne qui travaille sur ces machines doit arrêter la machine en tournant le bouton d'arrêt. Pour couper et verrouiller l'alimentation électrique, suivez le cordon d'alimentation électrique de la machine jusqu'à la boîte de disjoncteur sur le mur. Cette boîte doit être située à 30 pieds de la machine. Tirez la poignée vers le bas ou mettez l'interrupteur à la position «OFF» (arrêt) pour couper le courant. Enfilez un cadenas dans les orifices de la poignée ou de l'interrupteur et verrouillez le tout de façon qu'il soit impossible de mettre la machine en marche sans enlever le cadenas. Seule la personne qui a verrouillé la machine doit avoir une clé pour ce cadenas. Si plus d'une personne est impliquée, la personne qui a débranché et verrouillé l'alimentation électrique doit communiquer le motif et l'état du débranchement et du verrouillage. Une étiquette en matière non conductrice placée dans un endroit discret peut servir à cette fin. Pour des conseils plus détaillés concernant cette procédure, veuillez consulter la section traitant de la Loi sur la santé et la sécurité au travail – Règlement, établissements industriels.

Garantie:
Tout équipement conçu et fabriqué par Rotobale Compaction Solutions Inc. (RCS) comporte une garantie d'un (1) an, pièces et main-d'œuvre. Les systèmes de déchets Rotobale sont construits de matériaux de qualité supérieure et leur fonctionnement continu à capacité nominale est garanti. Toute pièce qui s'avère défectueuse dans un délai d'un (1) an à compter de la date de son installation sera remplacée sans frais, pourvu que l'acheteur informe RCS des défauts constatés. Certaines unités peuvent être achetées avec garantie prolongée.

Annulation de garantie:
Si les instructions de ce manuel sont expressément mises en pratique, le fonctionnement du système de compaction Rotobale est garanti. Toutefois, si l'exploitation du système est effectuée d'une manière non conforme avec les présentes instructions et qu'un défaut apparaît dans le système de compactage de déchet, le propriétaire rend nulle la garantie qui accompagne sa machine Rotobale. En outre, les défauts résultant de travaux d'entretien non autorisés par R.C.S ont pour effet de rendre nulle la garantie.

Declaration of Conformance

Pre-Start Health and Safety Review Exemption

Machine Name:	**Self-Contained Compactor**
Machine Model:	**RC – Series (RC-20 / RC-30 / RC-35 / RC-40)**

Based on the safety component installation instructions and electrical drawings provided, the above items are in compliance with the following standards;

Description	Standards requirement met for compliance
Safety control circuit design	Is in accordance with the manufacturer requirements and CSA Z432, Clause 8.2 Safety control system performance criteria.
Emergency stop	Is in accordance with NFPA 79 Electrical Standard for Industrial Controls, Clause 9.5.2 Stop Functions – Category <0,1>

Rotobale Compaction Solutions Inc declares that the above noted machine has been designed and constructed in accordance with the following standards:

- CAN/CSA Z432-16 – Safeguarding of Machinery
  - ISO 13849-1 - Safety of machinery — Safety-related parts of control systems - Part 1: General principles for design
- CAN/CSA C22.1 – Canadian Electrical Code, Part 1
- SPE-1000 - Model Code for the Field Evaluation of Electrical Equipment

Rotobale Compaction Solutions Inc also declares that the protective elements employed on this machine have been installed according to the manufacturer's instructions.
This document can be used as a declaration that forms a Pre-Start Health and Safety Review Exemption as required by Ontario Regulation 851, Section 7, subsection 10.

This document must be kept readily available in the workplace for as long as the protective element remains or is used in the workplace.

Rotobale Compaction Solutions
7232 Arthur Side Road # 5 West,
Kenilworth, Ontario N0G 2E0
Tele: (519) 323-3673 Fax: (519) 323-3816

ROTOBALE COMPACTION SOLUTIONS PACK MORE, SPEND LESS RCS
7232 Arthur Side Rd. #5 West | Kenilworth, Ontario | N0G 2E0
Phone: 519-323-3673 | Fax: 519-323-3816 |Toll Free: 1-800-565-8027
Email: info@rotobalecompaction.ca Website: www.rotobalecompaction.ca

RC, 4260 & C Series Compactor - Annual Inspection Report

Customer Name_____ Inspection Date: _____

Make/Model of Equipment _____ Inspected by: _____

Serial # _____

Powerpack Electrical Inspection Points	Good	Needs Repair	Comments
Check Key Switch			
Check Reset & Reverse Buttons			
Check Emergency Stop Button			
Check all Indicator Lights			
Check Door & Gate Switches (if appl.)			
CAUTION LOCK OUT / TAG OUT			
Check all Electrical Connections in Panel are Tight			
Check all Timers are Secured to Base			
Check Main Supply & Control Fuse Sizing			

Powerpack Hydraulic Inspection Points	Good	Needs Repair	Comments
Check Pump, Suction & Pressure Hoses			
Check Main Valve for Leaks			
Check Relief Valve for Leaks			
Check Oil Level (Down 2" from top of tank when ram up)			

Compactor Inspection Points	Good	Needs Repair	Comments
Check Scraper, Slider & Ram			
Check Cylinder Shaft & Pins are Secure			
Check Cylinder Extend, Retract Hoses			
Check Back Charge Box clear (RC Only)			
Check Cylinder Cover Secure (RC/4260)			
Check Hydraulic Fittings on Side for Leaks			
Check Arm Clamps (Non RC Only)			
Check all Visible Anchor Points (Chute/Encl)			
Check Foam Building Seals (if Appl.)			

Container Inspection Points	Good	Needs Repair	Comments
Check & Grease all Wheels			
Check Door Latching Assembly			
Check Door Seal (RC Only)			
Check Door Chain & Latch			
Check & Grease Ratchet Loadbinder			
Check & Grease Ratchet Arm Lock (if Appl.)			
Check & Grease Door Hinges			
Check Compactor Rails & Guide Island			
Check all Pull Hooks			

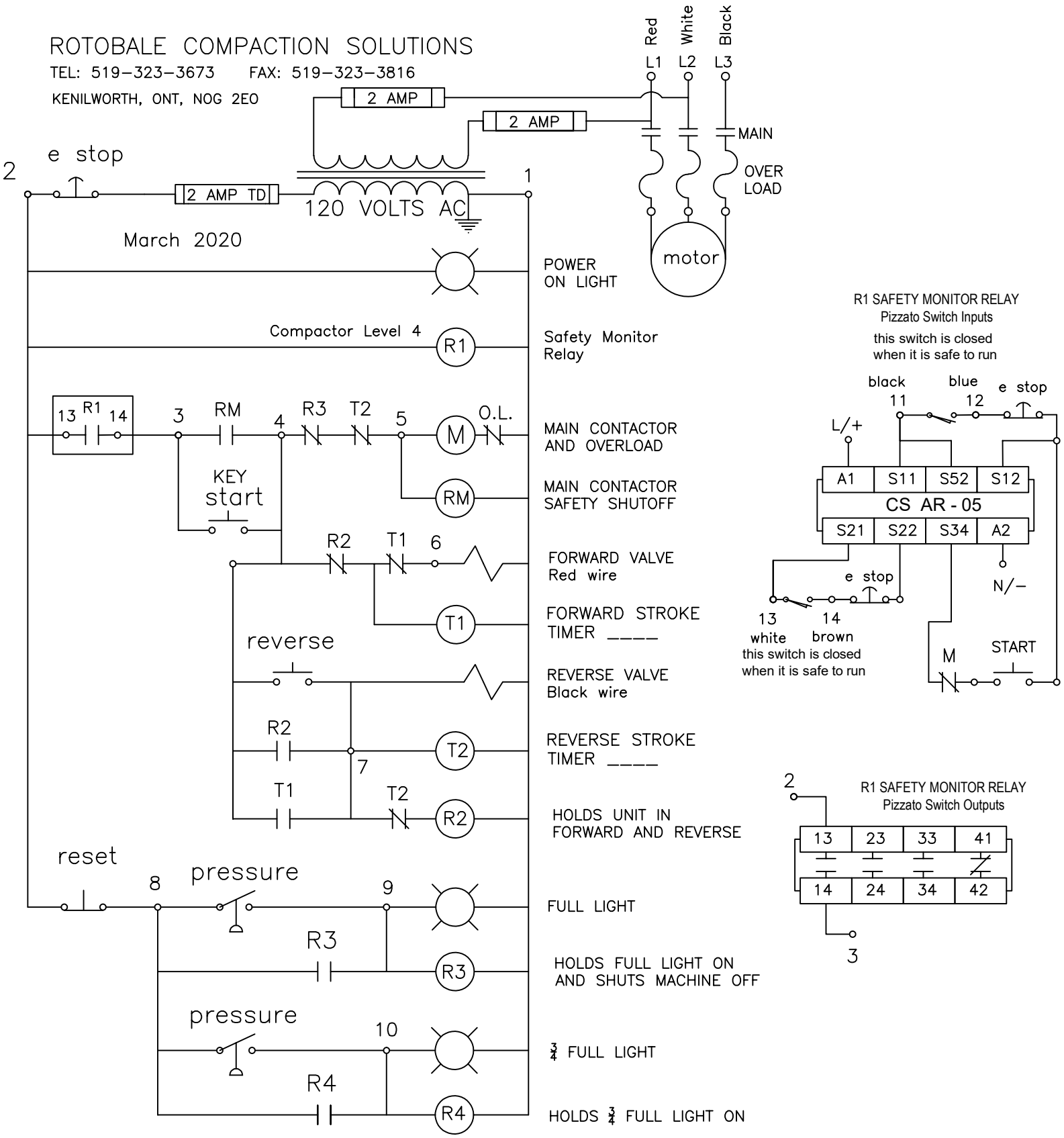
ROTOBALE COMPACTION SOLUTIONS
TEL: 519-323-3673 FAX: 519-323-3816
KENILWORTH, ONT, NOG 2EO
March 2020
Red
White
Black
L1
L2
L3
2 AMP
2 AMP
MAIN
OVER LOAD
motor
e stop
2 AMP TD
120 VOLTS AC
2
1
POWER ON LIGHT
Compactor Level 4
R1
Safety Monitor Relay
13 R1 14
3
RM
4
R3
T2
5
M
O.L.
MAIN CONTACTOR AND OVERLOAD
KEY
start
RM
MAIN CONTACTOR SAFETY SHUTOFF
R2
T1
6
FORWARD VALVE Red wire
T1
FORWARD STROKE TIMER ____
reverse
REVERSE VALVE Black wire
R2
T2
7
REVERSE STROKE TIMER ____
T1
T2
R2
HOLDS UNIT IN FORWARD AND REVERSE
reset
8
pressure
9
FULL LIGHT
R3
R3
HOLDS FULL LIGHT ON AND SHUTS MACHINE OFF
pressure
10
¾ FULL LIGHT
R4
R4
HOLDS ¾ FULL LIGHT ON
R1 SAFETY MONITOR RELAY
Pizzato Switch Inputs
this switch is closed when it is safe to run
black
11
blue
12
e stop
L/+
A1
S11
S52
S12
CS AR - 05
S21
S22
S34
A2
N/−
e stop
13
14
white
brown
this switch is closed when it is safe to run
M
START
R1 SAFETY MONITOR RELAY
Pizzato Switch Outputs
2
13
23
33
41
14
24
34
42
3

ROTOBALE COMPACTION SOLUTIONS

Compactor Hydraulics

	PARTS	DESCRIPTION	PARTS	DESCRIPTION
03–110–01	1) @ $\frac{1}{4}$" X 30 " $\frac{1}{4}$" ENDS	Gauge HOSE		
03–190–01	2) @ $\frac{1}{2}$" X 41$\frac{1}{2}$ " $\frac{1}{2}$" ENDS	CYLINDER HOSE	2) CYLINDER @ 4$\frac{1}{2}$ X 42	RAM CYLINDERS
03–175–01	2) @ $\frac{1}{2}$" X 25$\frac{1}{2}$" $\frac{1}{2}$" ENDS	CYLINDER HOSE		
03–180–01	4) @ $\frac{1}{2}$ X 28 $\frac{1}{2}$ ENDS	t - to cupling by quick coupler	D4-03-3C3-A156 - AC110	RAM VALVE
03–161–01	1) @ $\frac{1}{2}$ X 19 $\frac{1}{2}$ ENDS	P - HOSE	MANIFOLD ROTOBALE # 5	RAM MANIFOLD
03–218–01	1) @ $\frac{3}{4}$ X 26 $\frac{3}{4}$ ENDS	SUCTION HOSE	RELIEF 85002129	MAIN RELIEF
	$\frac{1}{4}$ turn changes psi 100 lbs on both relief and pressure switch			
	215 FRAME 1800 RPM	MOTOR	SW1 DMIC	PRESSURE SWITCH
	R 100 1$\frac{3}{8}$ X $\frac{5}{8}$	COUPLING		
	A-MOUNT 5-$\frac{5}{8}$	BELL HOUSING		
	HAIR 22 - 10 HP	10 Gal Hydraulic Pump		

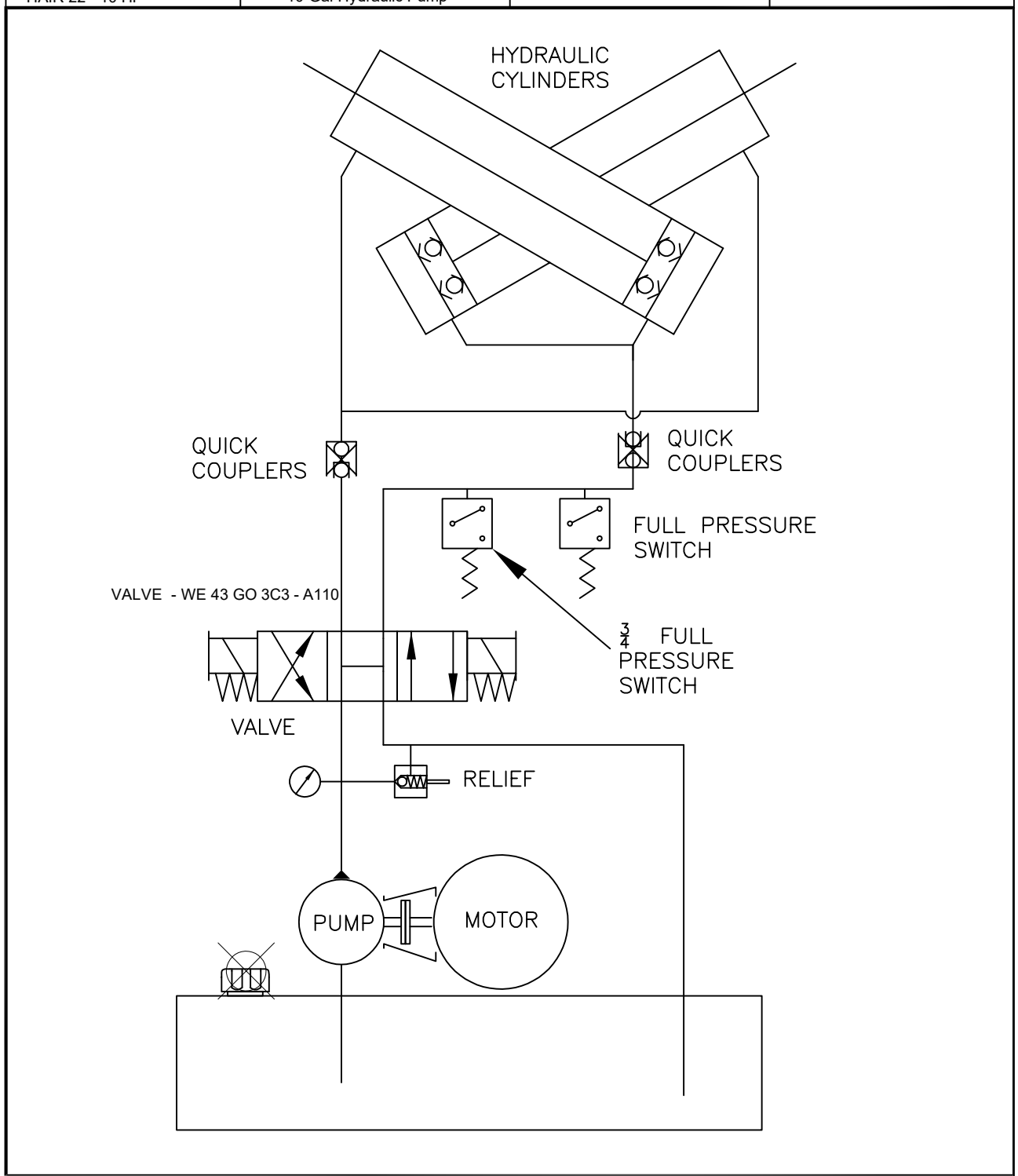

ROTOBALE COMPACTION SOLUTIONS

Compactor Hydraulics

	PARTS	DESCRIPTION	PARTS	DESCRIPTION
03–110–01	1) @ $\frac{1}{4}$" X 30 " $\frac{1}{4}$" ENDS	Gauge HOSE		
03–190–01	2) @ $\frac{1}{2}$" X 41$\frac{1}{2}$ " $\frac{1}{2}$" ENDS	CYLINDER HOSE	2) CYLINDER @ 4$\frac{1}{2}$ X 42	RAM CYLINDERS
03–175–01	2) @ $\frac{1}{2}$" X 25$\frac{1}{2}$" $\frac{1}{2}$" ENDS	CYLINDER HOSE		
03–180–01	4) @ $\frac{1}{2}$ X 28 $\frac{1}{2}$ ENDS	t - to cupling by quick coupler	D4-03-3C3-A156 - AC110	RAM VALVE
03–161–01	1) @ $\frac{1}{2}$ X 19 $\frac{1}{2}$ ENDS	P - HOSE	MANIFOLD ROTOBALE # 5	RAM MANIFOLD
03–219–01	1) @ 1" X 26 1" ENDS	SUCTION HOSE	RELIEF 85002129	MAIN RELIEF
	$\frac{1}{4}$ turn changes psi 100 lbs on both relief and pressure switch			
	215 FRAME 1800 RPM	MOTOR	SW1 DMIC	PRESSURE SWITCH
	R 100 1$\frac{3}{8}$ X $\frac{5}{8}$	COUPLING		
	A-MOUNT 5-$\frac{5}{8}$	BELL HOUSING		
	HAIR 22 - 10 HP	10 Gal Hydraulic Pump		

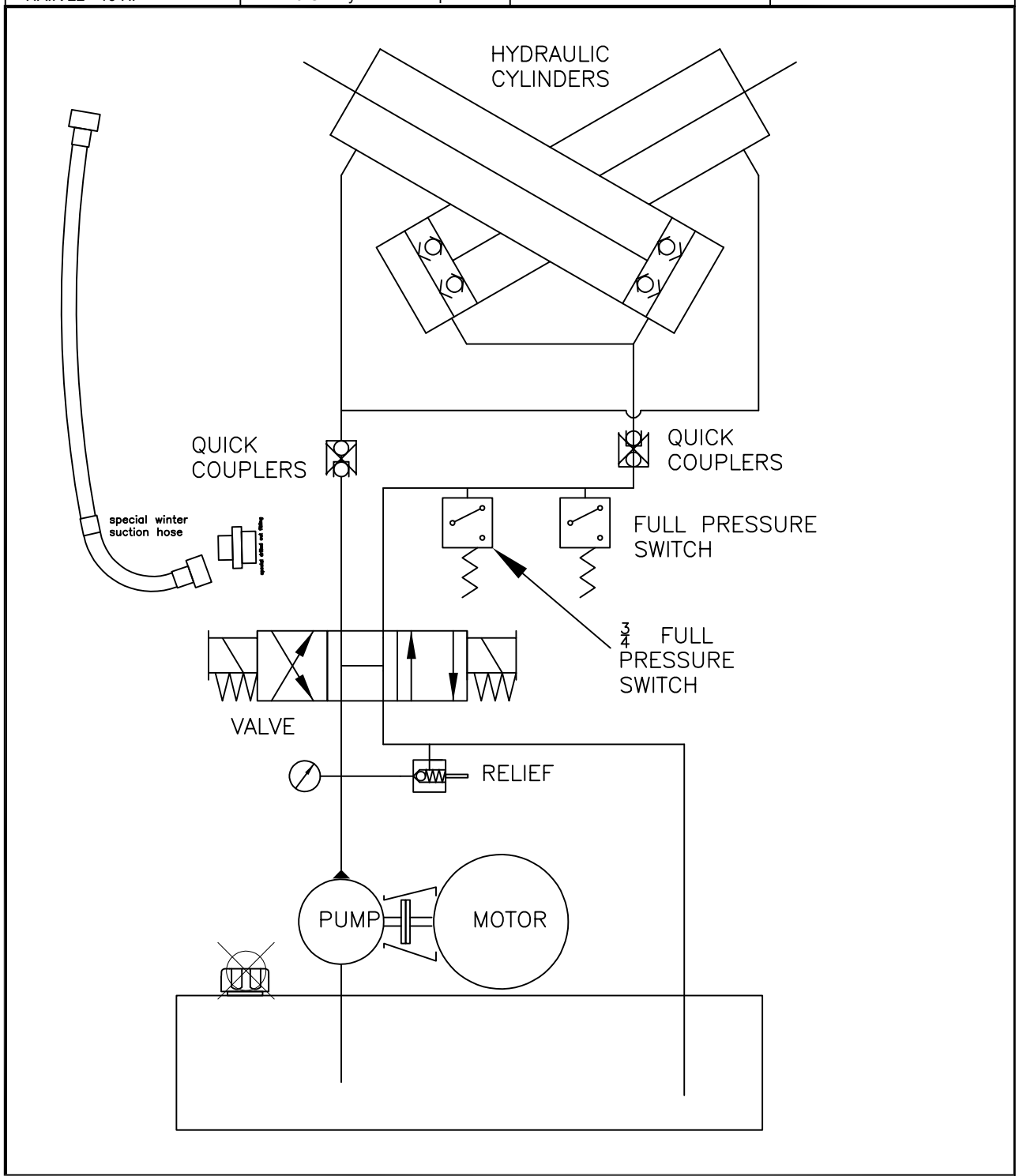

Product Data Sheet

NOCOLUBE AW SERIES

NOCOLUBE AW Series are premium hydraulic fluids formulated from high quality paraffinic base oils that meets severe pump requirements of all major manufacturers. NOCOLUBE AW Series provides outstanding anti-wear protection. The oils will provide excellent long service life under severe industrial and mobile hydraulic applications.

Typical Approvals

Vickers I-286-S, M-2950-S
Cincinnati Milacron P-68, P-69, P-70
Denison HF-0
DIN 51524, Part 2
AFNOR NF-E 48-690/1
AFNOR E 48-603 HM
ISO 11158 TYPE HM

GENERAL CHARACTERISTICS

NOCOLUBE AW	32	46	68	100	220
Product Code	NOC1657	NOC1658	NOC1659	NOC2778	NOC2779
Appearance	Light Pale	Light Pale	Light Pale	Light Pale	Dark Pale
Flash Pt., COC °C	212	226	234	242	258
Pour Point, °C	-24	-24	-18	-15	-15
Viscosity					
CST @ 40°C	32.0	46.0	68.0	100.0	220.0
CST @ 100°C	5.4	6.7	8.5	11.1	18.7
Rust ASTM D 665B	Pass	Pass	Pass	Pass	Pass
Copper Strip Corrosion	1A	1A	1A	1A	1A
Oxidation Life (hours), ASTM D-943	2500+	2500+	2500+	ND	ND
Viscosity INDEX	104	104	107	95	93

FEATURES

- Outstanding Thermal Stability
- Long Service Life
- Superior Hydrolytic Stability
- Excellent Remissibility
- Low Pour Point
- Qualified Products

BENEFITS

- Reduces sludge and sticking problems in close tolerance components
- Provides superior system cleanliness with reduced oxidation
- protects against rust and corrosion
- Works well when, contaminated with a small amount of water. Readily separates large amounts of water
- Good low temperature performance
- Proven field performance

Don’t pollute! Dispose of used oil properly!
Call your NOCO sales representative for details on our Oil Recovery Program.
All reasonable care has been taken to ensure that the above information is accurate as of the date of printing.

NOCO Energy CORP.
Tonawanda, NY 14150
(800) 500-6626

DATE

16 / 03 / 2019

Product Data Sheet

NOCO MULTI-PURPOSE EP#2

NOCO MULTI-PURPOSE EP#2 is compatible with the most popular greases in use today, including Aluminum complex, calcium, calcium complex and lithium grease. It is not compatible with barium Ben tone or poly urea greases.

NOCO MULTI-PURPOSE EP#2 is multi-purpose, premium quality grease made from high viscosity Index base oils and a lithium complex soap thickener system. Because of its outstanding performance Properties, it can be used for the lubrication of machinery under heavy loads and high temperatures in a wide range of automotive, industrial, agricultural, mining and construction applications.

NOCO MULTI-PURPOSE EP#2 can be used to lubricate plain ball and roller bearings in equipment Operating from slow to high speeds and at temperatures ranging from –24° C (15°F) to 170°C (365°F).

TYPICAL PROPERTIES & CHARACTERISTICS

Test Methods	Description	Specification
	NLGI Grade	2
ASTM D 217	Cone penetration @ 77°F, worked 60 strokes	265 - 295
ASTM D 128	Thickener Type	Lithium Complex
ASTM D 128	Thickener Content, %	4 - 7
ASTM D 2265	Dropping Point	168°C, (360° F)
ASTM D 445	Base Oil Viscosity, cut @ 40°C	175 - 180
ASTM D 2270	Viscosity Index	80 min.
VISUAL	Color	Dark Amber
VISUAL	Appearance	Smooth
ASTM D 2509	Timkin OK Load, lbs.	35 min

Don’t Pollute! Dispose or used oil properly!
Call your NOCO sales representative for details on our Oil Recovery Program

All reasonable care has been taken to ensure that the above information is accurate as of the date of printing.

NOCO Energy Corp.
Tonawanda, NY 14150
(800) 500-6626

STANDARD SPECIFICATION

MODEL RC	20	30	35	40
LENGTH (A)	17 FT	21 FT	23 FT	25 FT
CARDBOARD WEIGHT APPROX.	2 TON	3 TON	3.5 TON	4 TON
WET WEIGHT APPROX.	9 TON	13.5 TON	16 TON	18 TON

MOTOR	5 HP	10 HP
PUMP SIZE	5.4 G.P.M.	10.8 G.P.M.
CYCLE TIME	98 SECONDS	49 SECONDS
VOLTS	208 / 575	208 / 575
AMPS	15 / 6	30 / 12

ROTOBALE COMPACTION SOLUTIONS

KENILWORTH, ONT, CAN, 7232, ARTHUR ROAD # 5, NOG 2EO

TEL: 519-323-3673 FAX: 519-323-3816

COMBINATION COMPACTOR

SPECIFICATIONS ARE SUBJECT TO CHANGE WITHOUT NOTICE
TO ACCOMODATE EQUIPMENT IMPROVEMENTS

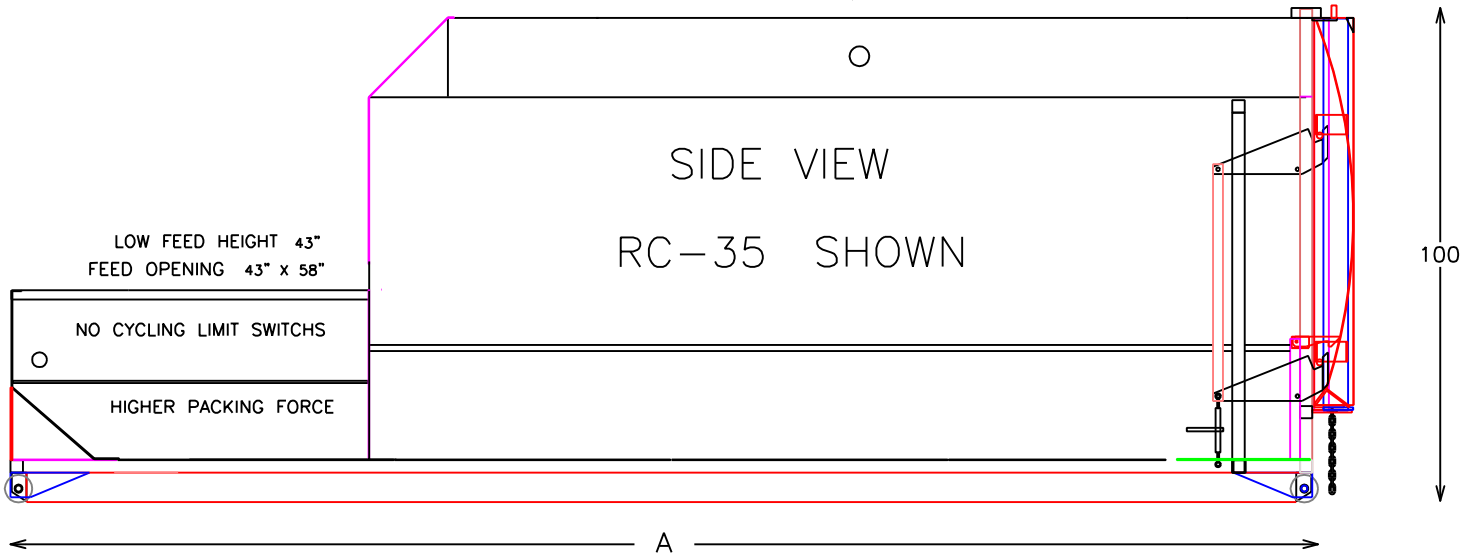

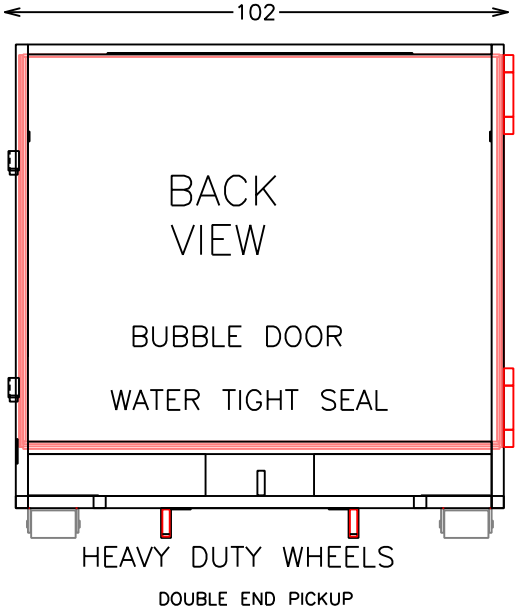

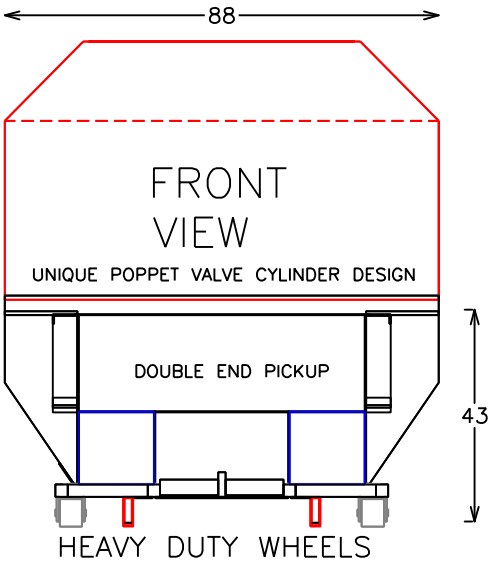

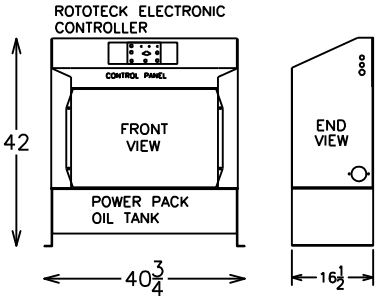

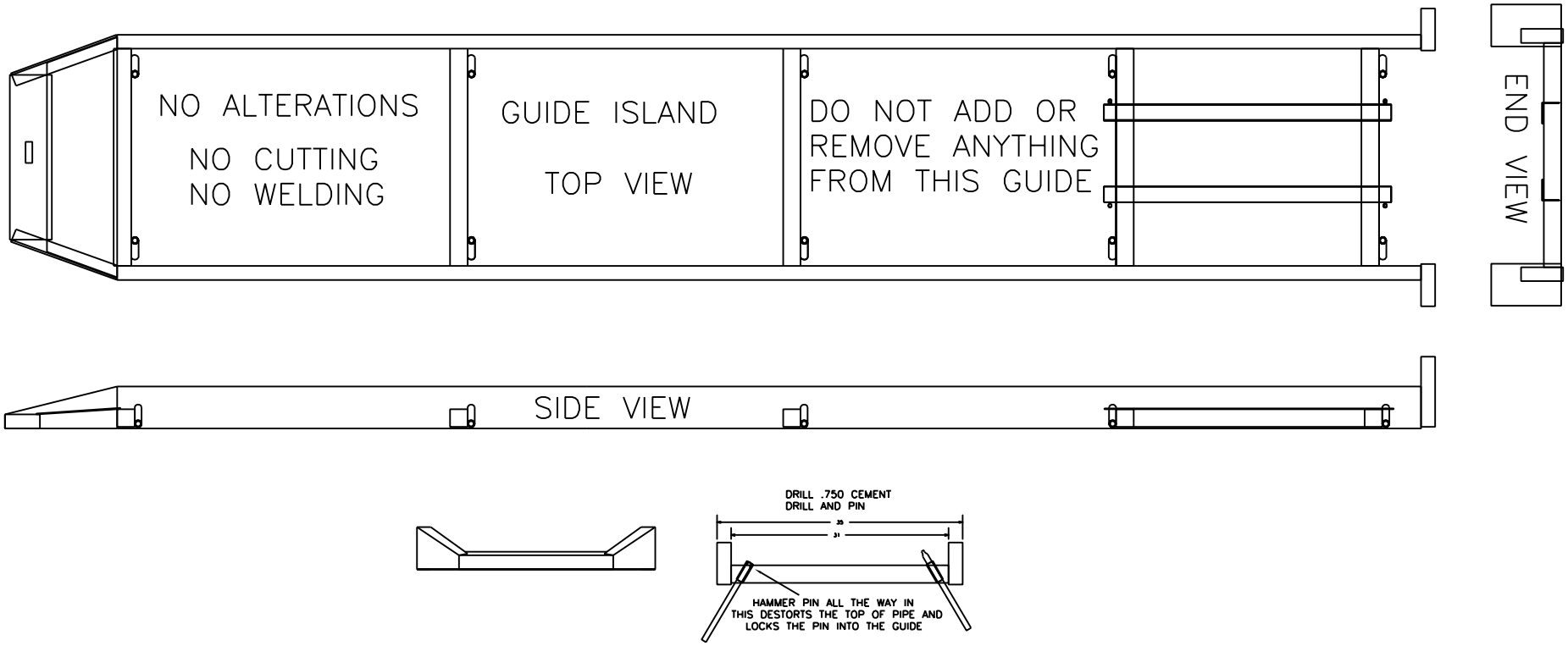
NO ALTERATIONS
NO CUTTING
NO WELDING
GUIDE ISLAND
TOP VIEW
DO NOT ADD OR
REMOVE ANYTHING
FROM THIS GUIDE
END VIEW
SIDE VIEW
DRILL .750 CEMENT
DRILL AND PIN
35
31
HAMMER PIN ALL THE WAY IN
THIS DESTORTS THE TOP OF PIPE AND
LOCKS THE PIN INTO THE GUIDE